VERSION
20260908

FAIR

bicycle

DROP BEST UC

OFFSET
SADDLE CLAMP

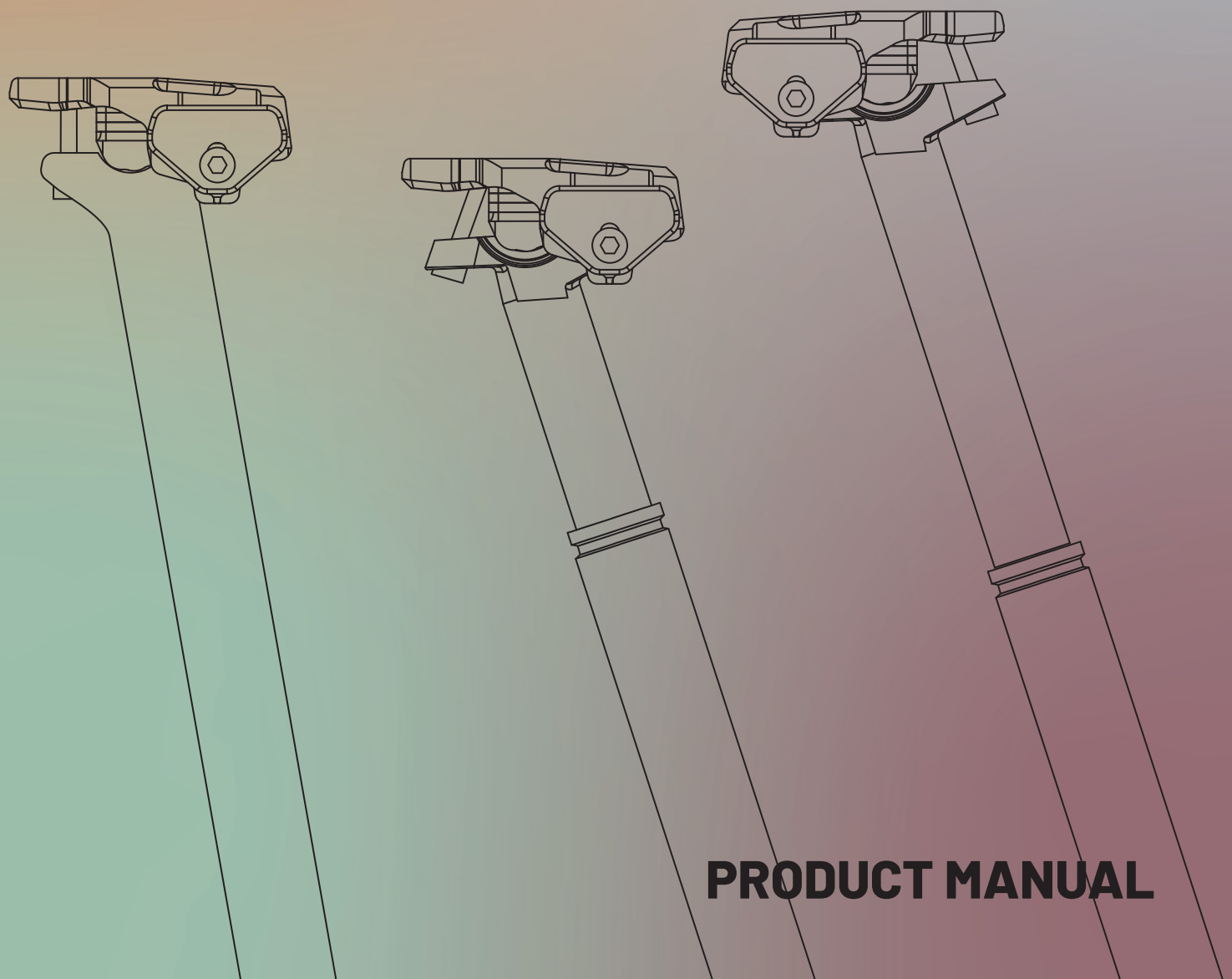

PRODUCT MANUAL

DIRECTORY

1.	SAFETY	p.3
2.	COMPATIBILITY	p.4
3.	PARTS DESCRIPTION	p.5 - 8
4.	PREPARATION	p.9
5.	INSTALLATION	p.10 - 12
6.	MAINTENANCE	p.13

1.SAFETY

DEAR BICYCLE FRIEND!
Please read this manual.
Please ride bikes, hard.

IMPORTANT SAFETY NOTICE
This manual is meant to be used by professional bike mechanics. If you are not a professional bike mechanic you should not install these bike components. If you do not understand parts or the whole of this manual contact FAIR bicycle or a professional bike mechanic and ask for advice.

Read this manual in its integrity.

All FAIR bicycle manuals are available here:
www.fairbicycle.com/manuals

Should you be unable to access this manual online, please contact FAIR bicycle.

FAIR bicycle
Hübscheren 6
8932 Mettmenstetten
Switzerland

hello@fairbicycle.com
+41 76 533 00 25

Do not undertake any manipulations other than those explained in this manual.

Here comes the phrase without which no product manual is complete:

Failure to follow the instructions in this manual can lead to serious injury or death.

2.COMPATIBILITY

THE DROP BEST UC SADDLE CLAMP IS COMPATIBLE WITH:

ALMOST ALL DROPPER AND RIGID SEATPOSTS WHICH USE A VERTICAL SET OF MOUNTING BOLTS.

YOU CAN FIND A LIST OF VERIFIED COMPATIBLE SEATPOSTS HERE.

IF YOU ARE UNSURE ABOUT FIT, EITHER CONTACT US OR DOWNLOAD AND 3D PRINT THE DROP BEST UC DUMMIE HERE TO PHYSICALLY CHECK THE FIT. IT WILL ALLOW YOU TO CHECK THE FIT OF BOTH YOUR SEATPOST AS WELL AS YOUR PREFERRED SADDLE MODEL! PLEASE BE AWARE THAT THE DUMMIE USES THE MAXIMUM OF 11 MM OF SPACERS. TO CHECK THE FIT OF OTHER SPACER SETTINGS (SPACERS INCLUDED ARE 3 X 3 MM AND 2 X 2 MM), SIMPLY MEASURE YOUR CLEARANCE AND DEDUCT THE THICKNESS OF THE SPACERS IN A VERTICAL AXIS TO THE TOP SURFACE OF DROP BEST UC.

UPON SPECIAL REQUEST, DROP BEST UC CAN BE RUN WITH AS MUCH AS 21MM OF SPACERS. IF YOUR POST REQUIRES MORE THAN 11MM SPACERS, PLEASE GET IN TOUCH AT hello@fairbicycle.com

FAIR BICYCLE DELIVERS ALL DROP BEST UC VERSIONS WITH A VARIETY OF BOLTS. HOWEVER, FOR BEST PARTS CLEARANCE AND WEIGHT SAVINGS (IT'S IMPORTAAANT:) ALL BOLTS ARE MEANT TO BE CUT TO SIZE AFTER THEIR CORRECT LENGTH HAS BEEN DETERMINED (FOR CUTTING INSTRUCTIONS PLEASE REFER TO P.11).

DROP BEST UC IS COMPATIBLE WITH MOST SADDLES THAT HAVE EITHER 7 MM ROUND RAILS (USUALLY METAL RAILS) OR 7 x 9 RESP. 7 x 10 MM OVAL RAILS (USUALLY COMPOSITE RAILS). SOME SADDLE GEOMETRIES CAN LIMIT THE RANGE OF FORWARDS/BACKWARDS ADJUSTMENT WHEN DROP BEST UC IS USED TO CREATE A BACKWARDS OFFSET.

3.PARTS DESCRIPTION

DROP BEST UC F21

(FOR FOX TRANSFER 2021 POSTS)

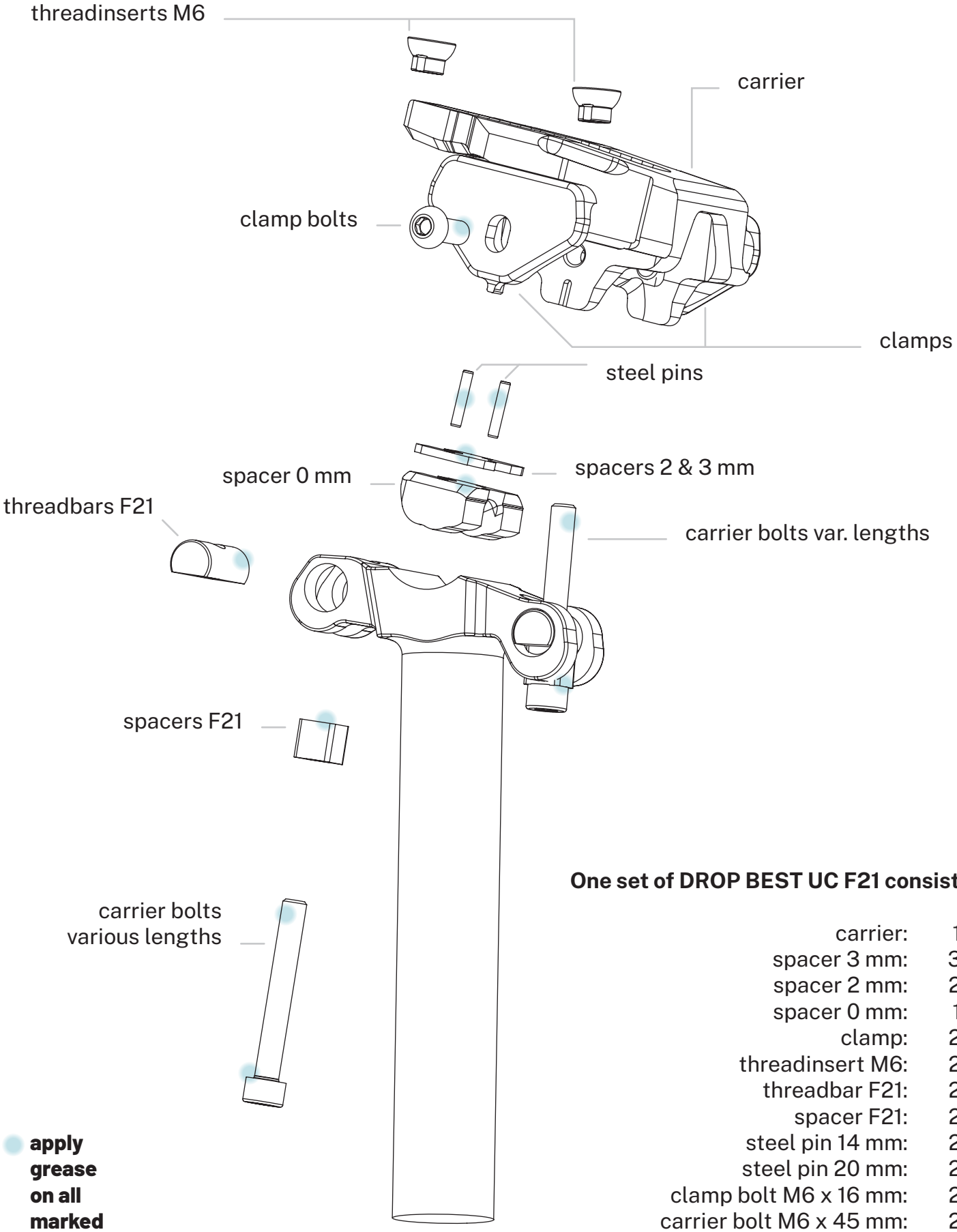

One set of DROP BEST UC F21 consists of:

carrier:	1 pcs
spacer 3 mm:	3 pcs
spacer 2 mm:	2 pcs
spacer 0 mm:	1 pcs
clamp:	2 pcs
threadinsert M6:	2 pcs
threadbar F21:	2 pcs
spacer F21:	2 pcs
steel pin 14 mm:	2 pcs
steel pin 20 mm:	2 pcs
clamp bolt M6 x 16 mm:	2 pcs
carrier bolt M6 x 45 mm:	2 pcs
carrier bolt M6 x 50 mm:	1 pcs

apply grease on all marked areas

3.PARTS DESCRIPTION

DROP BEST UC F25 convex

(FOR FOX TRANSFER 2025, TRANSFER NEO AND OTHER POSTS WITH CONCAVE HEAD INTERFACES)

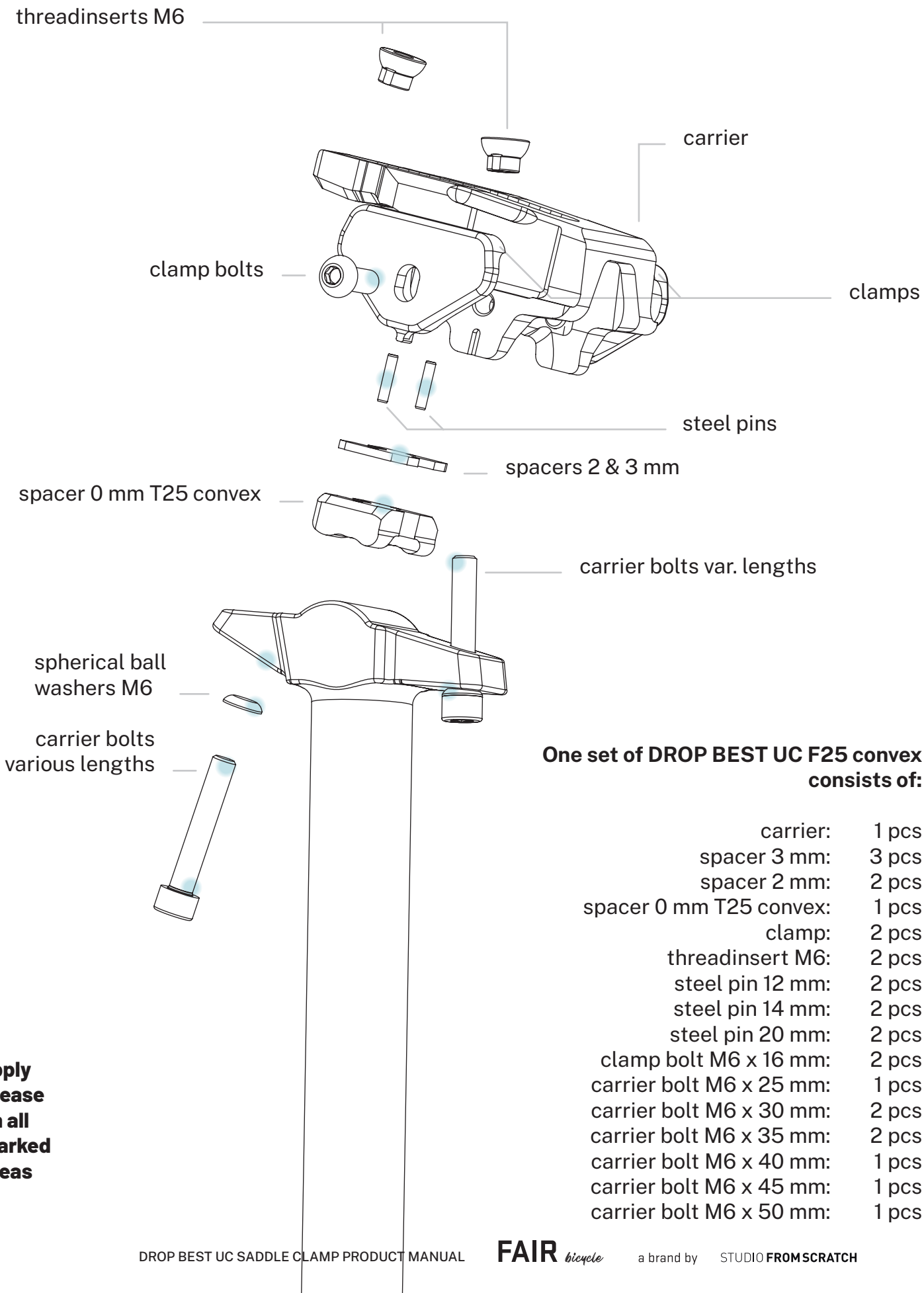

One set of DROP BEST UC F25 convex consists of:

carrier:	1 pcs
spacer 3 mm:	3 pcs
spacer 2 mm:	2 pcs
spacer 0 mm T25 convex:	1 pcs
clamp:	2 pcs
threadinsert M6:	2 pcs
steel pin 12 mm:	2 pcs
steel pin 14 mm:	2 pcs
steel pin 20 mm:	2 pcs
clamp bolt M6 x 16 mm:	2 pcs
carrier bolt M6 x 25 mm:	1 pcs
carrier bolt M6 x 30 mm:	2 pcs
carrier bolt M6 x 35 mm:	2 pcs
carrier bolt M6 x 40 mm:	1 pcs
carrier bolt M6 x 45 mm:	1 pcs
carrier bolt M6 x 50 mm:	1 pcs

apply grease on all marked areas

3.PARTS DESCRIPTION

DROP BEST UC M5

(FOR ALL POSTS USING M5 HARDWARE)

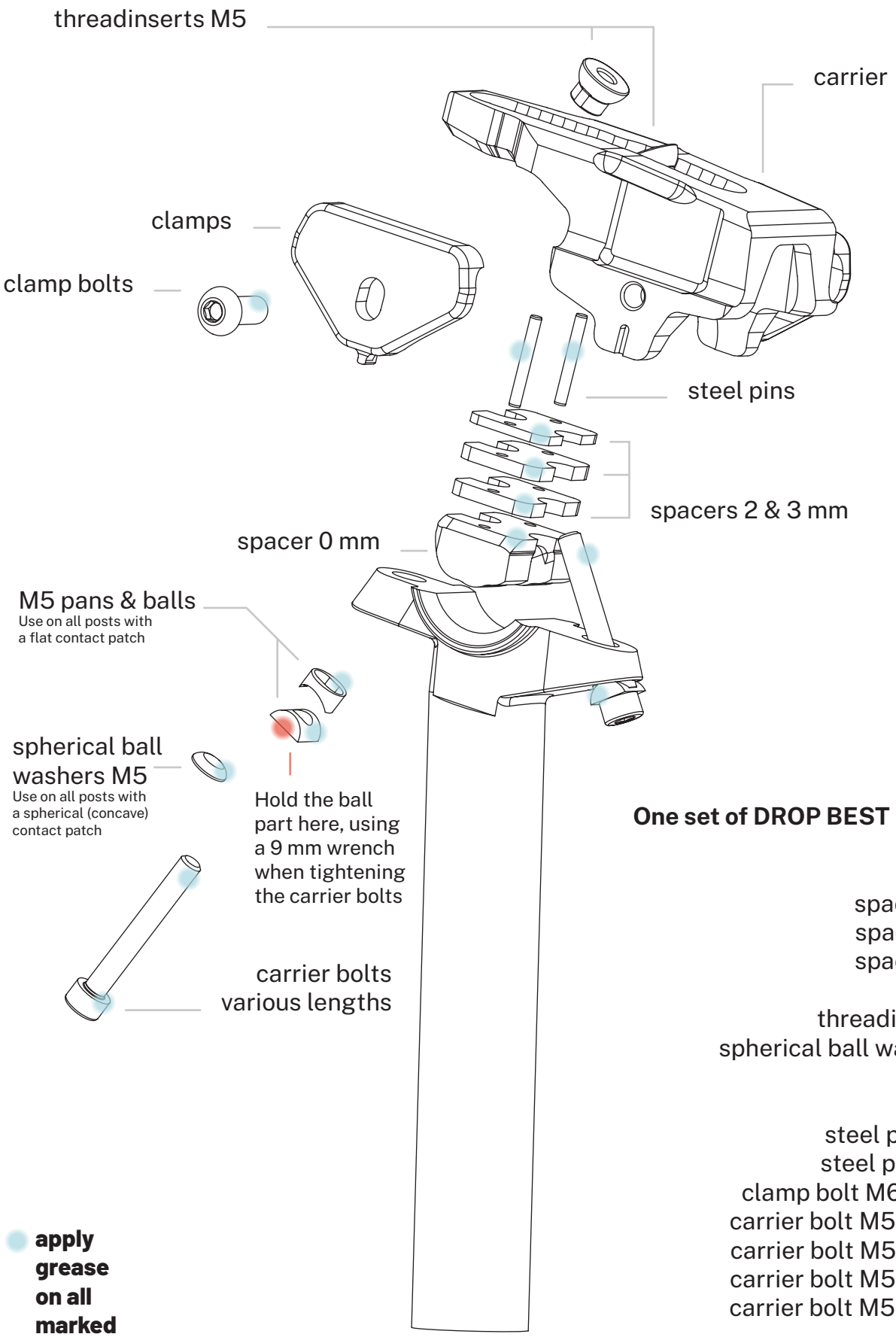

One set of DROP BEST UC M5 consists of:

carrier:	1 pcs
spacer 3 mm:	3 pcs
spacer 2 mm:	2 pcs
spacer 0 mm:	1 pcs
clamp:	2 pcs
threadinsert M5:	2 pcs
spherical ball washer M5:	2 pcs
M5 ball:	2 pcs
M5 pan:	2 pcs
steel pin 14 mm:	2 pcs
steel pin 20 mm:	2 pcs
clamp bolt M6 x 16 mm:	2 pcs
carrier bolt M5 x 35 mm:	2 pcs
carrier bolt M5 x 40 mm:	1 pcs
carrier bolt M5 x 45 mm:	1 pcs
carrier bolt M5 x 55 mm:	1 pcs

apply grease on all marked areas

3.PARTS DESCRIPTION

DROP BEST UC M6 / DROP BEST UC M6 redshift
(FOR ALL POSTS USING M6 HARDWARE)

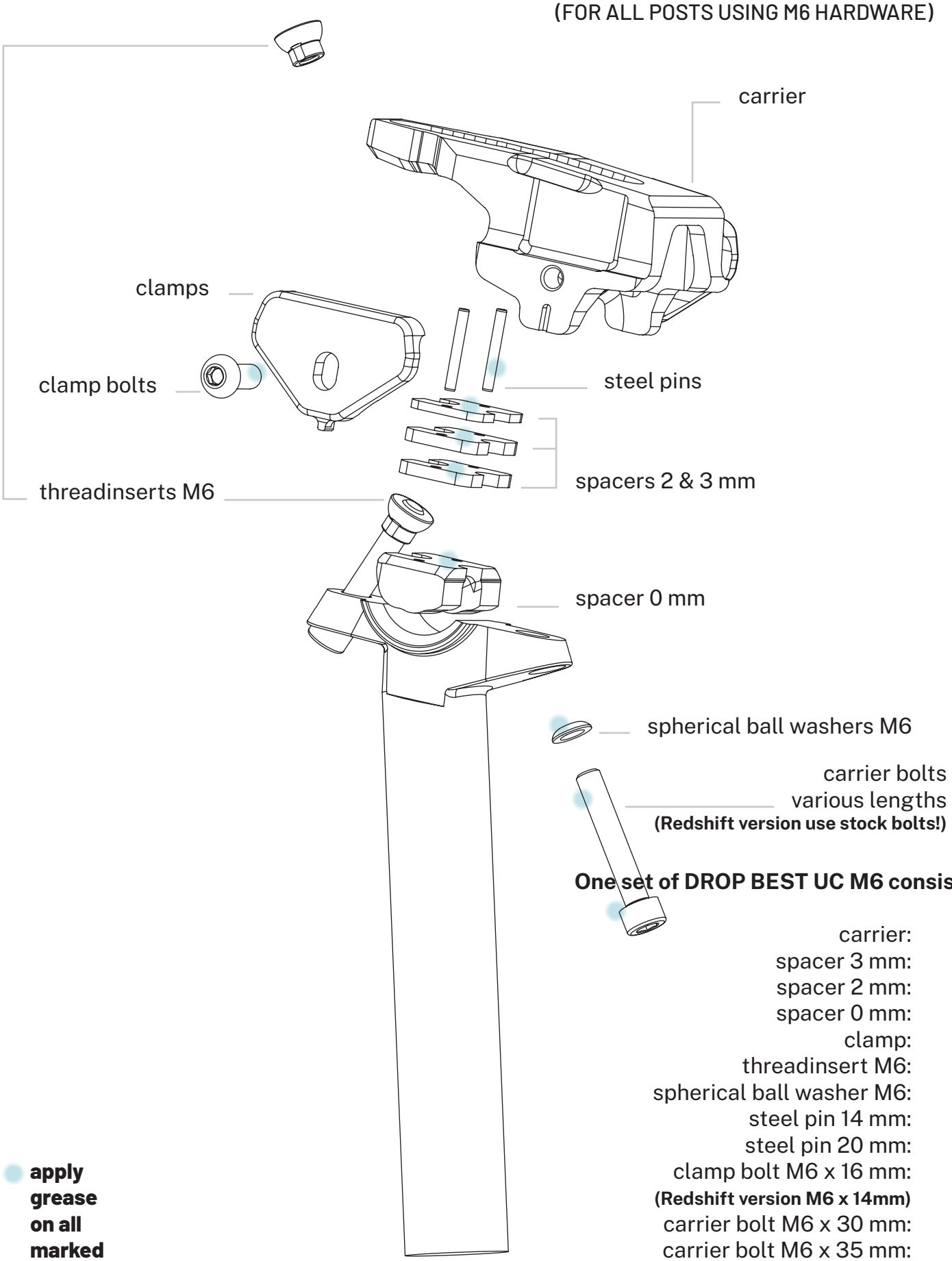

One set of DROP BEST UC M6 consists of:

carrier:	1 pcs
spacer 3 mm:	3 pcs
spacer 2 mm:	2 pcs
spacer 0 mm:	1 pcs
clamp:	2 pcs
threadinsert M6:	2 pcs
spherical ball washer M6:	2 pcs
steel pin 14 mm:	2 pcs
steel pin 20 mm:	2 pcs
clamp bolt M6 x 16 mm: **(Redshift version M6 x 14mm)**	2 pcs
carrier bolt M6 x 30 mm:	2 pcs
carrier bolt M6 x 35 mm:	2 pcs
carrier bolt M6 x 40 mm:	1 pcs
carrier bolt M6 x 50 mm:	1 pcs

apply grease on all marked areas

3.PARTS DESCRIPTION

DROP BEST UC AXS26

(FOR THE REVERB AXS MY26 POSTS WITH THE BATTERY AT THE SEAT COLLAR

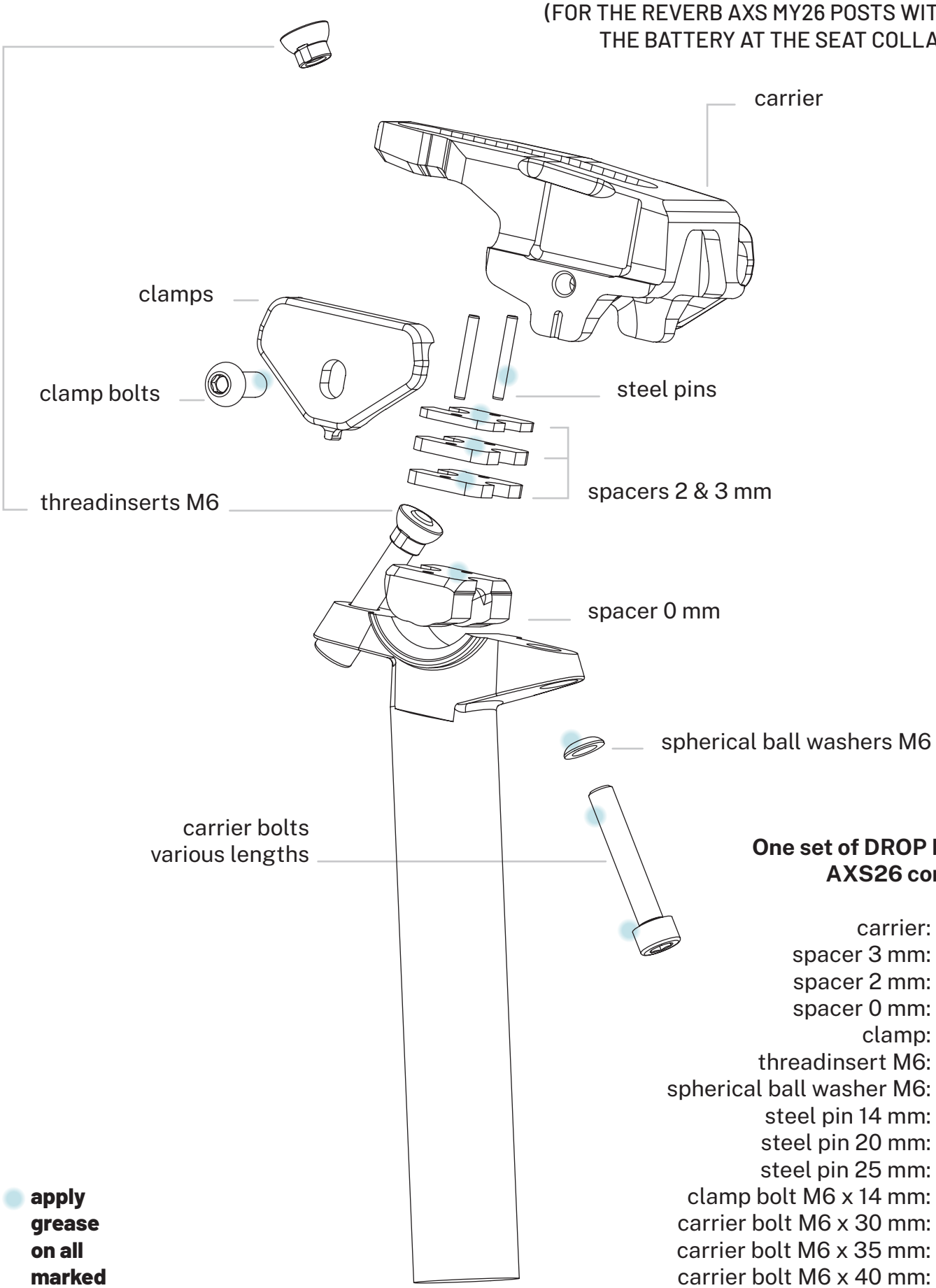

One set of DROP BEST UC AXS26 consists of:

carrier:	1 pcs
spacer 3 mm:	4 pcs
spacer 2 mm:	2 pcs
spacer 0 mm:	1 pcs
clamp:	2 pcs
threadinsert M6:	2 pcs
spherical ball washer M6:	2 pcs
steel pin 14 mm:	2 pcs
steel pin 20 mm:	2 pcs
steel pin 25 mm:	2 pcs
clamp bolt M6 x 14 mm:	2 pcs
carrier bolt M6 x 30 mm:	1 pcs
carrier bolt M6 x 35 mm:	2 pcs
carrier bolt M6 x 40 mm:	1 pcs
carrier bolt M6 x 45 mm:	1 pcs
carrier bolt M6 x 50 mm:	1 pcs

apply grease on all marked areas

3.PARTS DESCRIPTION

DROP BEST UC road

(FOR ALL NON DROPPER, BUT PROPRIETARY POSTS USING M5/M6/M7/M8 HARDWARE)

For posts using downwards facing M5, M6 or M7 bolts:

- M5/M6 socket cap bolts, M7 hex head bolt
- threadinsert 6.1mm (M5/M6 bolts)
- threadinsert 7.1mm (M7 bolt)

For posts using an M8 bolt:

! Apply med. strength thread-lock, and set the nut flush with the upper end of the M6 section of the special bolt. Let dry, adjust saddle position. Tighten the other bolt to the defined torque value!

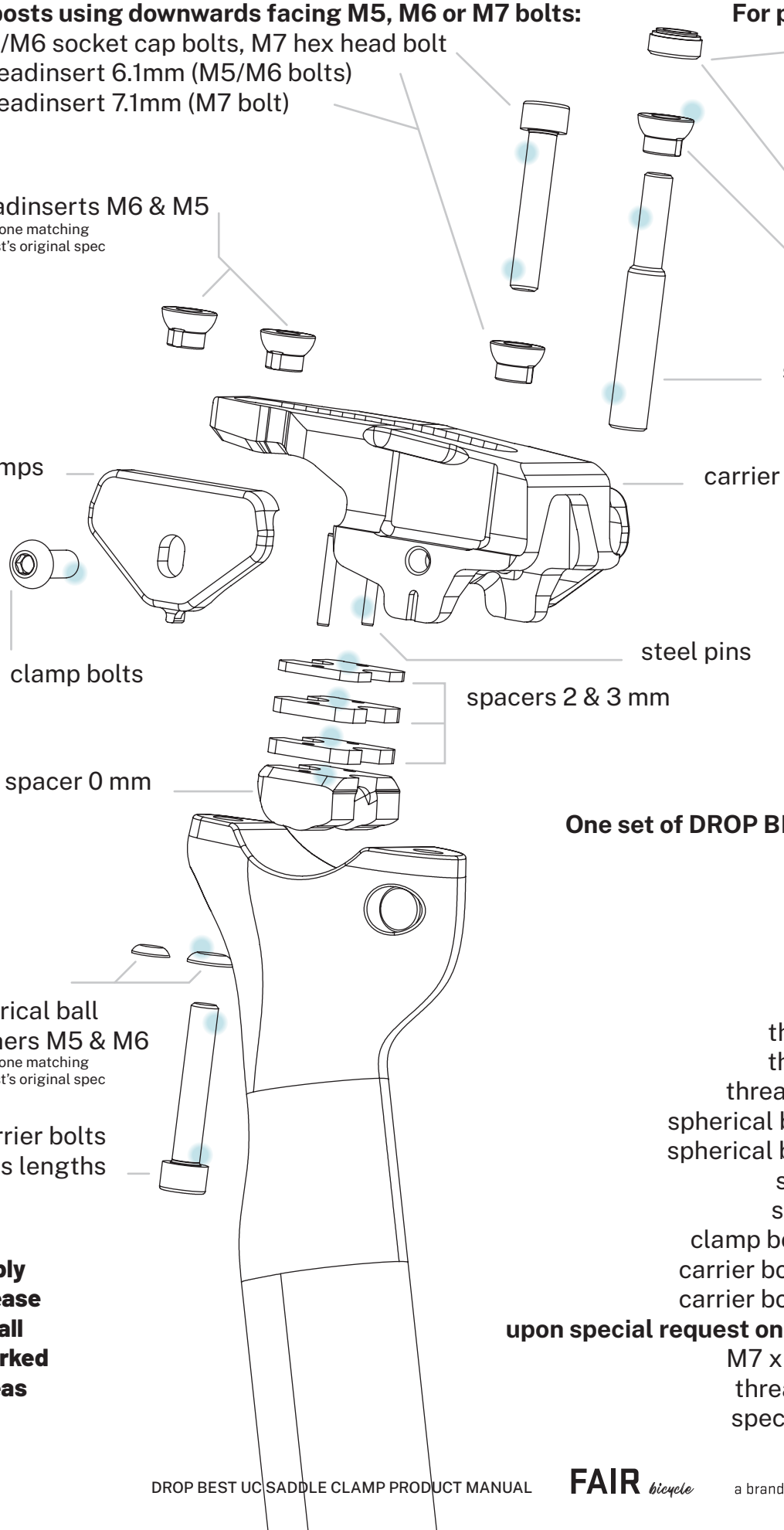

apply grease on all marked areas

One set of DROP BEST UC road consists of:

carrier:	1 pcs
spacer 3 mm:	3 pcs
spacer 2 mm:	2 pcs
spacer 0 mm:	1 pcs
clamp:	2 pcs
threadinsert M6:	1 pcs
threadinsert M5:	1 pcs
threadinsert 6.1 mm:	1 pcs
spherical ball washer M6:	1 pcs
spherical ball washer M5:	1 pcs
steel pin 14 mm:	2 pcs
steel pin 20 mm:	2 pcs
clamp bolt M6 x 16 mm:	2 pcs
carrier bolt M6 x 45 mm:	2 pcs
carrier bolt M5 x 40 mm:	2 pcs

upon special request only (note when ordering!):

M7 x 60mm hex bolt	1 pcs
threadinsert 7.1 mm	1 pcs
special M6/M8 bolt:	1 pcs
special nut M6:	1 pcs

4.PREPARATION

To prepare for assembly you will need a 5 and 6 mm allen key. Also a torque wrench able to be adjusted between 3.5 and 12 Nm. Some kind of mounting grease and a medium strength, removable threadlock liquid which allows the connection to be disassembled with hand tools and/or a heat gun (we test with and recommend: Loctite® 243). If you need to shorten bolts, you may need a metal cutting disc and a metal file, since we supply high strength bolts and these will damage a standard metal saw blade.

No preparation of the parts is needed to install the DROP BEST UC saddle clamp when bought new. Simply remove the saddle clamp from your seatpost, clean its head with a soft, non fraying, dry cloth and install the DROP BEST UC. Installation instructions see page 12 onwards.

If you have changed your saddle or disassembled your DROP BEST UC for another reason, go through the following steps:

1. Clean all parts with a soft, non fraying, dry cloth.
2. Apply grease on all parts as marked in the illustrations on pages 5 to 8.
3. Install as explained on page 12 onwards.

5.INSTALLATION

Put your bicycle in a bike stand.

1. Install the carrier

1.1 Install the carrier with a forwards or backwards offset, as desired. **!Make sure the correct mounting hardware is installed, oriented as shown in the illustrations on pages 5 to 10. Also apply grease where indicated.**

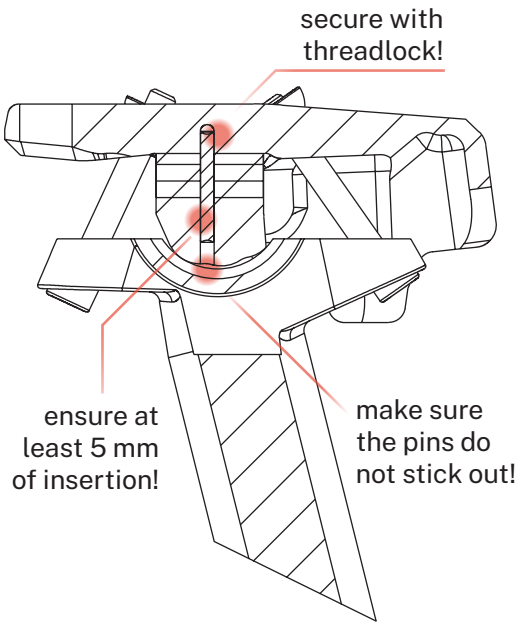

1.2 Install the steel pins into the carrier body. Make sure the pins are fully inserted into the carrier (3.8mm depth). Use a medium strength, removable threadlock liquid (we use and test with Henkel LOCTITE® 243, medium strength) which allows the connection to be disassembled with hand tools and / or a heat gun.

Tip: Use a vice with soft or ground jaws to remove the pins. This will make sure they do not get scratched in the process, so they will reinstall nicely and smoothly.

1.3 Install spacers as desired. A guideline related to market leading seatposts can be found here. You may run anywhere between 0 mm (no spacers) to 11 mm of spacers (all spacers included in your DROP BEST UC). Make sure that the steel pins are always fully inserted and fixed into the carrier with threadlock. And are inserted at least 5 mm at all times into the part *spacer 0 mm*. Use the supplied 14 and 20 mm pins accordingly. **Special note:** Upon special request, DROP BEST UC can be run with as much as 21mm of spacers. If your post requires more than 11mm spacers, please get in touch at hello@fairbicycle.com

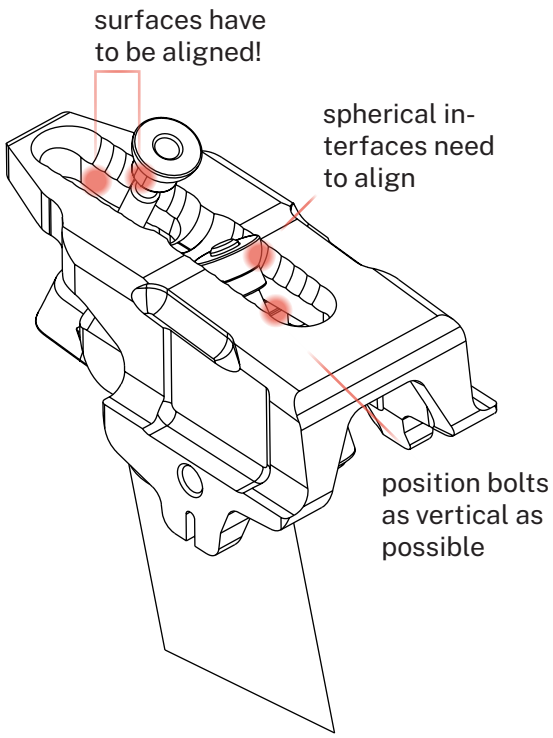

1.4 Install the carrier bolts and threadinserts. Make sure you use the correct spherical washer or the M5 pan/ball or Fox F21 threadbar/spacer, as illustrated on pages 5 to 10. Make sure you orient the threadinserts so that their flat machined surfaces slide into the slot. Make sure the threadinsert's spherical surface properly engages one of the spherical seats in the carrier. Position the threadinserts to achieve the most vertical orientation of the carrier bolts possible. Tighten the carrier bolts slightly using an allen key. Slide the saddle over the carrier (see step *2. for how to) and adjust the saddle angle as de-

5.INSTALLATION

Ideally bolts stick out between 1 and 5 mm.

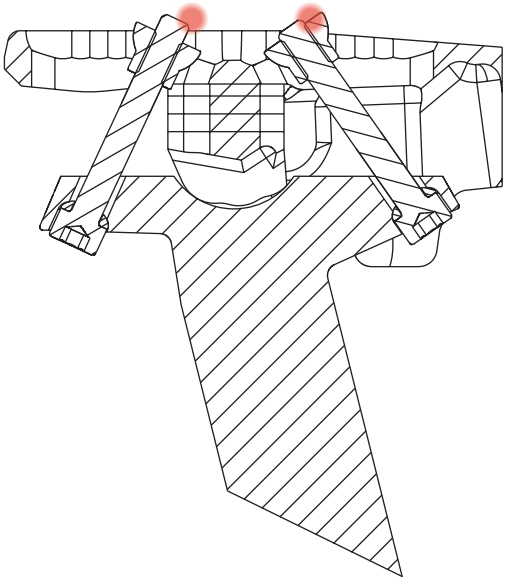

sired. At your selected saddle angle, make sure the carrier bolts engage all threads of the threadinserts and stick out between 1 and 5 mm, using the different length bolts supplied. If the bolts stick out too far, either cut them to the correct length or jump to step *2. Install the saddle*, and check whether the saddle at full load (e.g. jumping up from the saddle and dropping your full weight onto it) collides with the bolts sticking out. If it does, shorten the bolts.

Tip: Install two nuts onto the bolt to be shortened. Position the second nut so the amount of bolt to be cut sticks out behind the nut. Use the first nut to lock the second nut. Use the second nut as a guide while cutting. Using a vice, clamp the bolt at the first nut. After cutting, deburr the bolt using the file. Now, unscrewing the nuts, use them to reform the thread on the end of the bolt by threading them on and off the bolt end multiple times, without removing it completely, until you feel the thread running smoothly again.

!You may need a cutting disc to cut these high strength grade bolts, as, due to their hardness, they will damage any regular steel cutting saw blade!

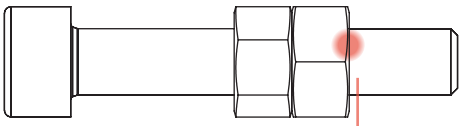

Lock the first nut.

Cut here with a cutting disc. Use the nut as a guide.

Now, using a calibrated torque wrench, tighten the carrier bolts as follows:

- All seatposts: Tighten them sequentially, until the required torque value is achieved.
- Seatposts using M5 hardware: Use the torque value recommended by the post manufacturer. If no value is indicated, tighten them to 3.5 Nm. Hold the ball parts with a 9 mm wrench as illustrated on p.7.
- Seatposts using M6 hardware: Tighten them to 5.5 Nm.
- Fox Transfer 2021 seatposts: Tighten them to 5.5 Nm.
- Road/proprietary seatposts: Use the torque value recommended by the post manufacturer. If no value is indicated, tighten them to 5.5 Nm for M6 bolts and to 3.5 Nm for M5 bolts. When using our special M6/M8 bolt or an M7 bolt, just use them to set the right saddle angle. Then tighten the other bolt to the torque value indicated here above.

Rounded areas

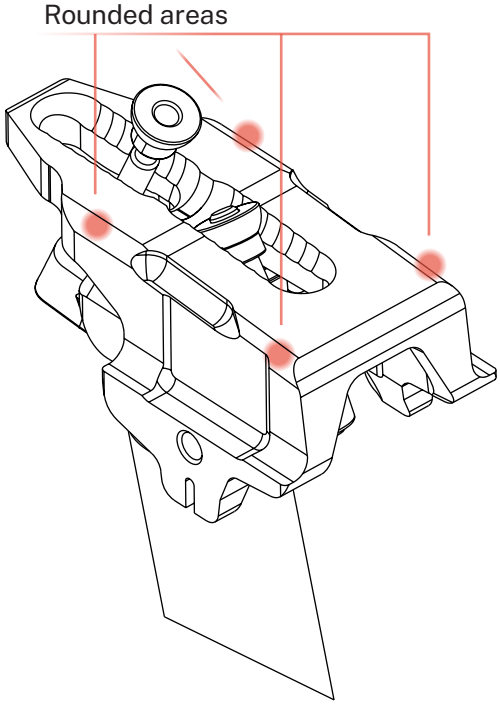

2. Install the saddle

Install the saddle. If necessary, slightly bend open the saddle rails by hand to avoid rail damage.

!Make sure you slide the saddle over the marked, rounded areas (shown in the illustration) of the carrier to avoid possible rail damage (especially when using carbon composite rails).

5.INSTALLATION

3. Install the clamps
3.1 First side clamp: Slot the anchor into the rail of the carrier.
3.2 Turn the clamp bolt by hand until the clamp touches the rail.
3.2.1 Redshift and AXS 26 only: Make sure to use the 14mm long bolts supplied with your DROP BEST UC M6 redshift / AXS 26!
3.3 Repeat with the second side clamp.
3.4 Now hold down the clamp against the rail with your thumb while pressing it down and tightening the clamp bolt handtight with an allen key.
3.5 Repeat with the second side clamp.
3.6 Use CAUTION and make sure you use an unworn bit in your torque key. Make sure the bit is and stays fully inserted into the bolt head hex interface at all times. Then tighten each bolt to 12 Nm using a torque wrench.
3.7 Set your desired seat angle if adjustment is still needed. Do not exceed or go below the recommendationsmentioned under 1.4.

4. For OneUp V3 users only

4.1 IMPORTANT: As a front carrier bolt, use the original OneUp M6 bolt with spherical head! If you use any other bolt, the bolt head will collide with the collar of the seatpost at max. travel!

5. Safety check
- Make sure the saddle rails do not slip in the seat post clamp.
- Make sure the saddle/carrier assembly does not move on the seatpost tube it rests on.
- Despite our best efforts, we cannot guarantee we are aware of all changes manufacturers make to their seatposts. Also we cannot foresee all the possible setups, you, as our valued customers, choose to use. Therefore it is very important to check whether DROP BEST UC collides with the seatpost collar, frame or any other parts/equipment of the bike at full insertion of the dropper post, or in normal riding condition for rigid posts.

Pay special attenion to rear tire/saddle collision at the post's and the bike's full travel! Especially if you run DROP BEST UC with rearward offet! Pay

6.MAINTENANCE

close attention on possible collisions of the saddle with the carrier bolts! If you have any kind of collision, we would appreciate informing us via email, so we can learn and further improve the design. Thank you!

6. Go ride!

After every 40 h of ride use:

1. Totally disassemble your DROP BEST.
2. Clean all parts with a soft, non fraying, dry cloth.
3. Check all parts for signs of corrosion, cracks or other damage.
4. If there are any signs of corrosion, cracks or other damage, replace the parts immediately and do not ride before doing so.
5. Regrease all the parts as illustrated on pages 5 to 10. Recommended grease: WAGNER Classic Oil KH 100. But any high quality mounting grease will work too.
6. Reinstall your DROP BEST following the instructions on page 12 onwards.

Failure to follow the instructions in this manual including these maintenance requirements can lead to serious injury or death!

Ride hard but safe!
THANK YOU

FAIR bicycle

Copyright 2026 FAIR bicycle
STUDIO FROM SCRATCH LTD.

Operational Headquarters:

FAIR bicycle
Hübscheren 6
8932 Mettmenstetten
Switzerland

email: hello@fairbicycle.com
phone: +41 76 533 00 25

Legal Address:

STUDIO FROM SCRATCH LTD.
Glärnischstrasse 297
8708 Männedorf

info@fromscratch.ch